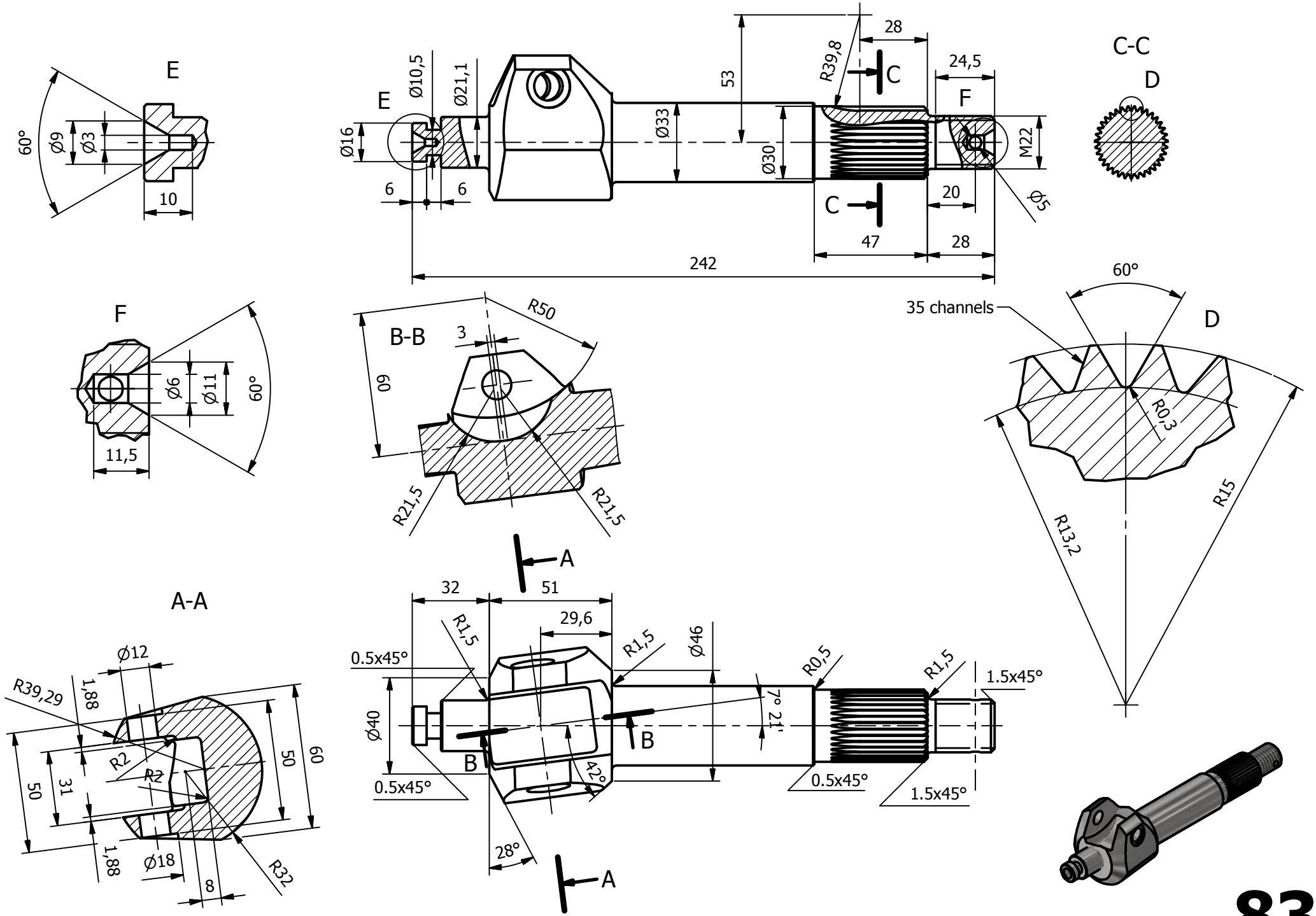

214344.656 mm^3